California Polytechnic State University Pomona
DEPARTMENT OF ELECTRICAL & COMPUTER ENGINEERING

Digital Logic Design Laboratory

ECE 2300L
Experiments 3

Implementing XOR function using basic gates

Prepared by
Kevyn Santos & Yanming Feng

Presented to
Dr. Yazdy R Mostafa

September 21 , 2023

Introduction:

In this lab, our objective centered around constructing, assessing, and testing a circuit employing AND, OR, and NOT logic gates to create a XOR logic gate. We compared the performance of this circuit with the information provided in the respective online datasheet for the eXclusive-OR (XOR) gate.

Prelab:

74LS86 (XOR gate):

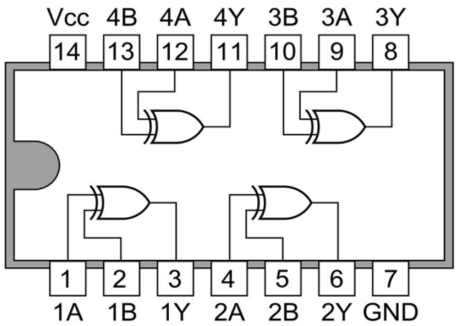

A	B	Output
0	0	0
1	0	1
0	1	1
1	1	0

Schematic for EXP 3:

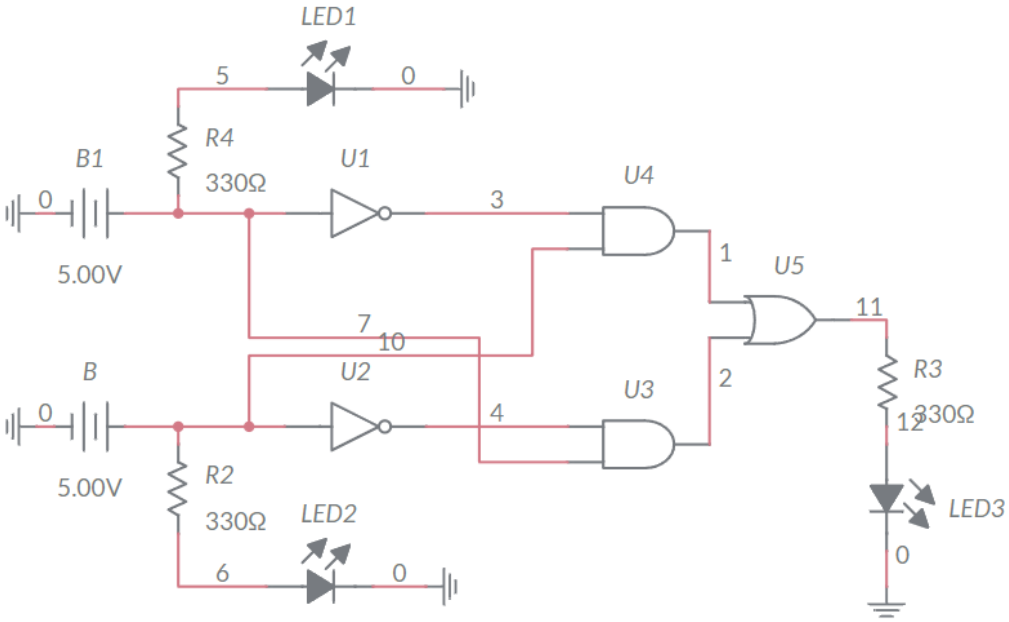

Procedure:

Fig. 1A shows LED A off and LED B off (LED A' & B' on)

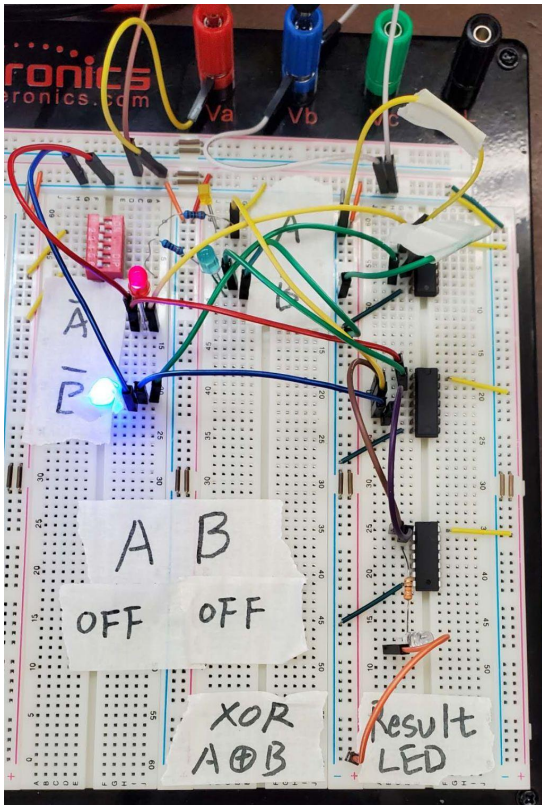

Fig. 1A

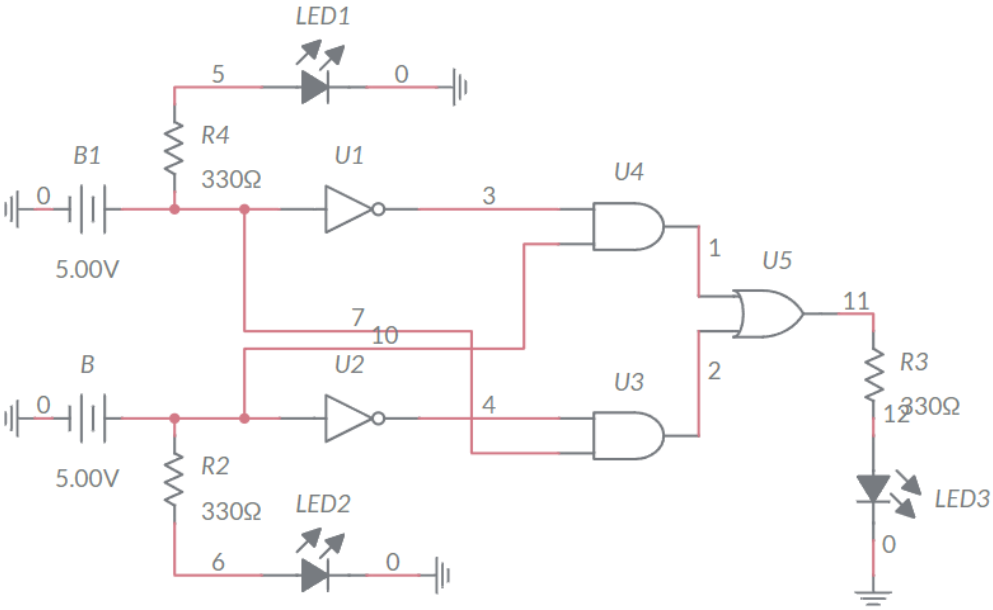

Fig. 1A diagram

Fig. 2A shows LED A off and LED B on (LED A’ on & B’ off)

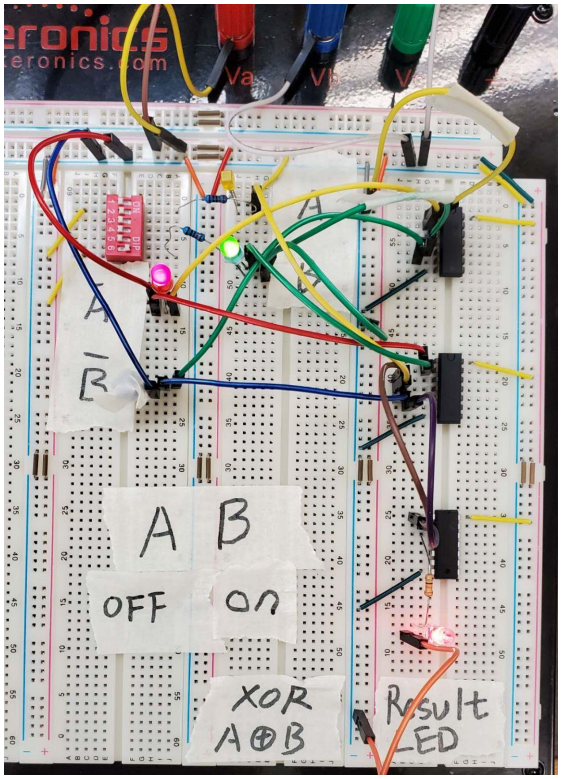

Fig. 2A

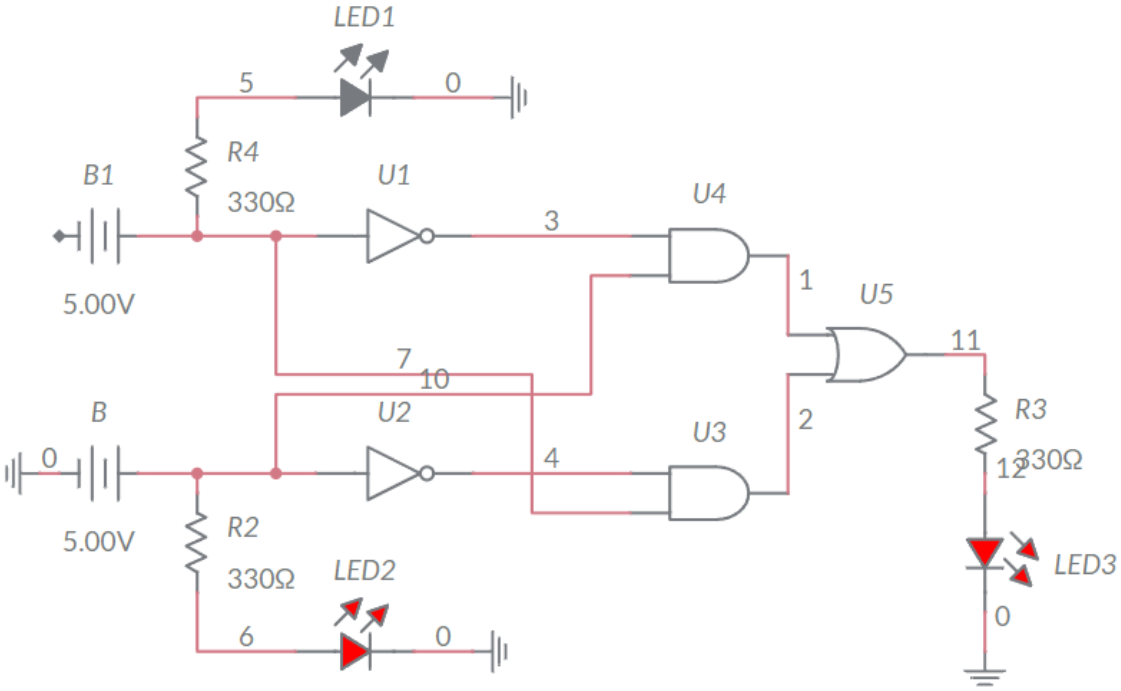

Fig. 2A diagram

Fig. 3A shows LED A on and LED B on (LED A’ & B’ off)

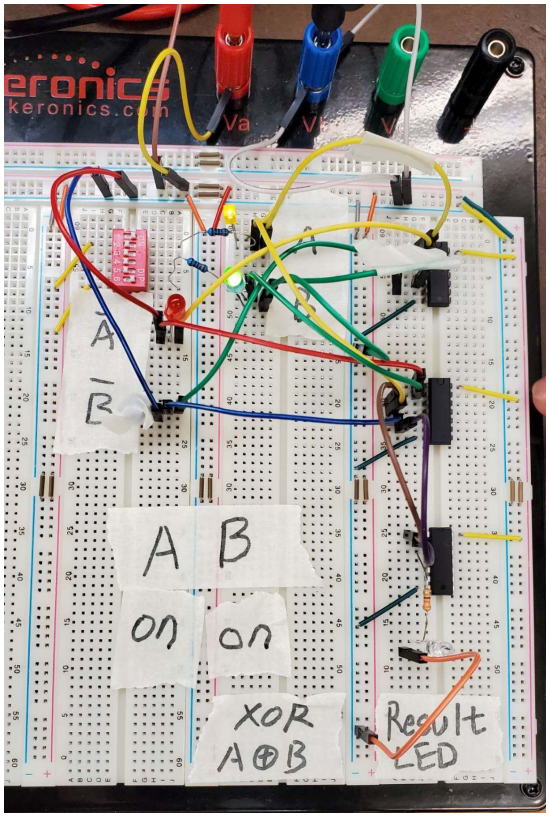

Fig. 3A

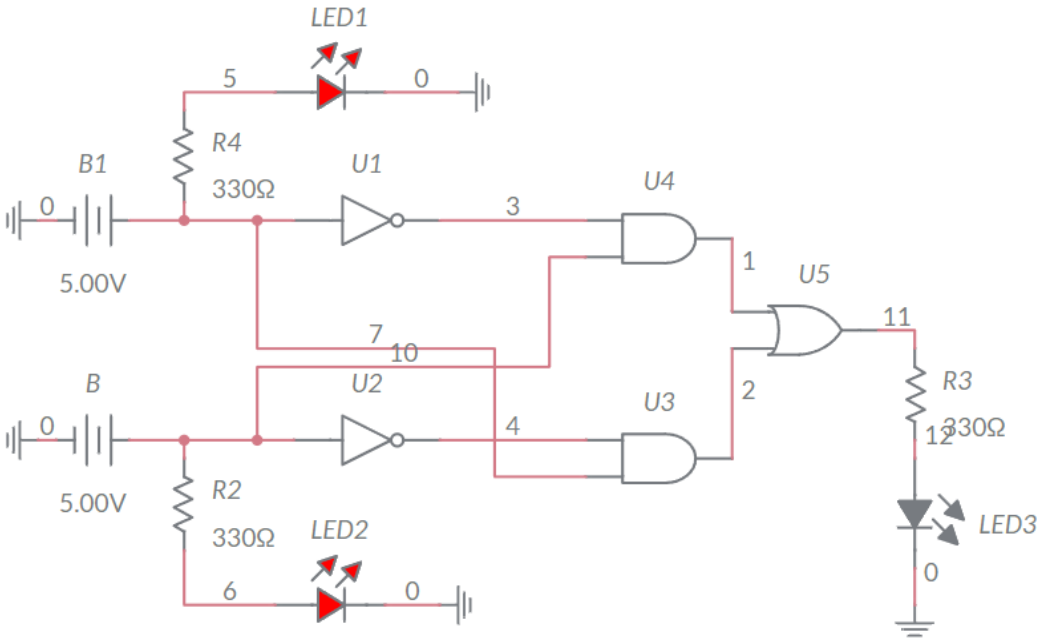

Fig. 3A diagram

Fig. 4A shows LED A on and LED B off (LED A’ off & B’ on)

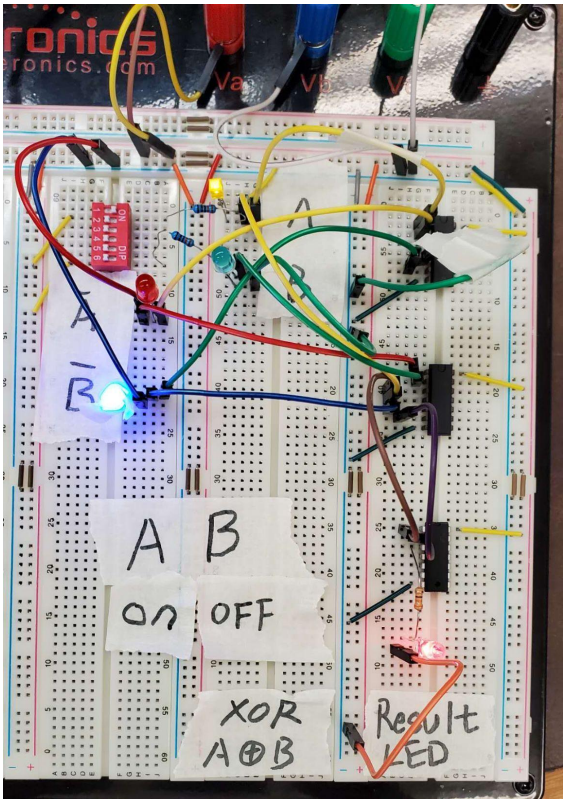

Fig. 4A

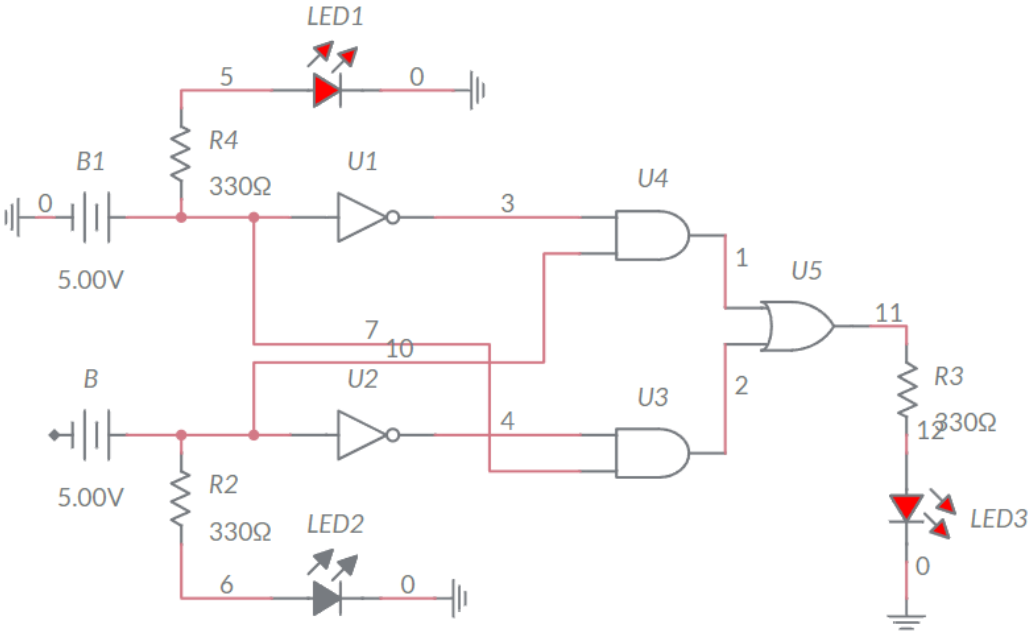

Fig. 4A diagram

Post-Lab:

XOR Gate:

- $Q = A \oplus B = AB' + BA'$

A	B	Q
0	0	0
0	1	1
1	0	1
1	1	0

Conclusion:

In this lab we used NOT, AND, & OR gates to create a XOR gate. During our analysis of this circuit we confirmed the XOR truth table, we observed that when both input LEDs were on, the output LED was off. We also observed that when only one input LED was on, the output LED would also turn on. Lastly, when both input LEDs were on, the output LED was off. These observations allowed us to confirm the XOR truth table. Overall, we learned how to use and analyze multiple simple logic gates to create a much more complex logic gate.